OPTIMA

DECOR

30 kg | 16 mm BOARD | 18 mm BOARD | BOARD+ MIRROR | PARTS

Twin track sliding doors with top hung carriage system

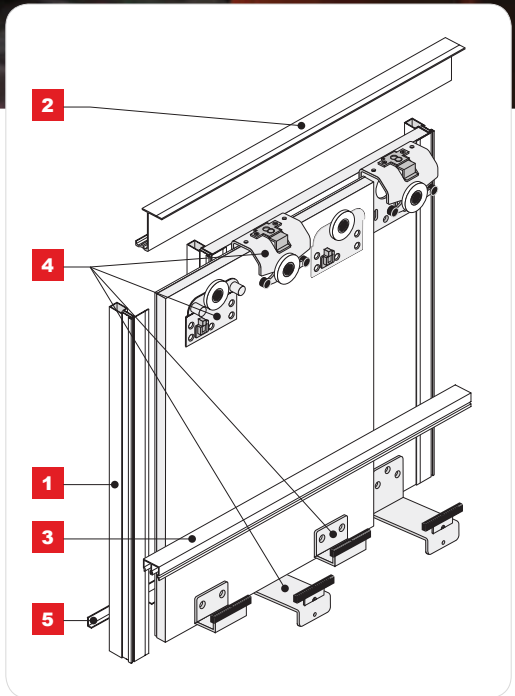

CHARACTERISTICS	
▶ Application	Sliding doors
▶ Track	Twin
▶ Carriage system	Top
▶ Top guide	Ball bearing carriage
▶ Bottom guide	Guide with metal bracket
▶ Construction	Board
▶ Filling	16 mm MFC or 18 mm
▶ Max. door load	30 kg
▶ Max. handle length	2400 mm
▶ Max. track length	2400 mm
▶ Textile door stops	Yes
▶ Anti-dust brushes	Yes
▶ Sales programme	Components can be purchased separately
▶ Decorative profile programme	n/a

USAGE
▶ Free standing furniture

Handle **OPTIMA 16**

16 mm BOARD | BOARD+ MIRROR

1a

CODE	COLOUR	LENGTH (mm)	COLLECTIVE PACKAGING	PRICED PER	NET PRICE
03176	SILVER	2400	20	item	

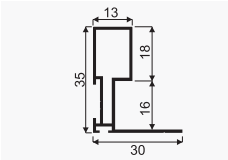

Handle **OPTIMA 18**

18 mm BOARD

1b

CODE	COLOUR	LENGTH (mm)	COLLECTIVE PACKAGING	PRICED PER	NET PRICE
03146	SILVER	2400	20	item	

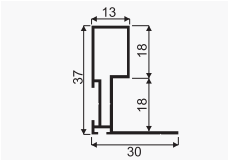

Top track **OPTIMA**

2

CODE	COLOUR	LENGTH (mm)	COLLECTIVE PACKAGING	PRICED PER	NET PRICE
03064	SILVER	2000	24	item	
03182	SILVER	2400	24	item	

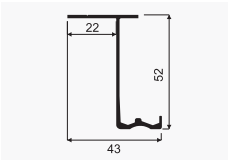

Bottom track **OPTIMA**

3

CODE	COLOUR	LENGTH (mm)	COLLECTIVE PACKAGING	PRICED PER	NET PRICE
20194	RAW	2000	24	item	
20214	RAW	2400	24	item	

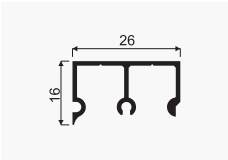

Set **OPTIMA II** for 2 wings (inner + outer)

4a

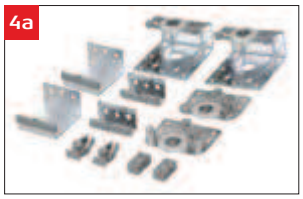

SET CODE	10192-SV	
DESCRIPTION	for 2 wings (inner + outer)	COLLECTIVE PACKAGING
Top front carriage OPTIMA	2 pcs	12 sets
Top back external carriage OPTIMA	2 pcs	
Bottom back guide OPTIMA	2 pcs	
Bottom front guide OPTIMA	–	
Side stopper OPTIMA	2 pcs	
Middle stopper OPTIMA	–	
Top track support OPTIMA	2 pcs	
	NET PRICE	

Set **OPTIMA II** for 1 wing (inner)

4b

SET CODE	10193-SV	
DESCRIPTION	for 1 wing (inner)	COLLECTIVE PACKAGING
Top front carriage OPTIMA	–	40 sets
Top back external carriage OPTIMA	2 pcs	
Bottom back guide OPTIMA	–	
Bottom front guide OPTIMA	2 pcs	
Side stopper OPTIMA	–	
Middle stopper OPTIMA	1 pc.	
Top track support OPTIMA	–	
	NET PRICE	

Angle section **MINI 11x17**

18 mm BOARD

5a

CODE	COLOUR	LENGTH (mm)	COLLECTIVE PACKAGING	PRICED PER	NET PRICE
00102	SILVER	1700	120	item	
00103	SILVER	2350	120	item	
00104	SILVER	3000	120	item	

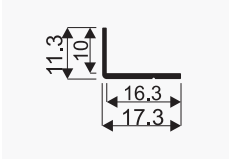

Angle section **ZW 20x18**

5b

CODE	COLOUR	LENGTH (mm)	COLLECTIVE PACKAGING	PRICED PER	NET PRICE
00058	SILVER	1700	60	item	
00059	SILVER	2350	60	item	
00060	SILVER	3000	60	item	

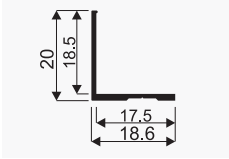

Angle section **K2-Decor**

Programme VICTORIA ABC DECOR

5c

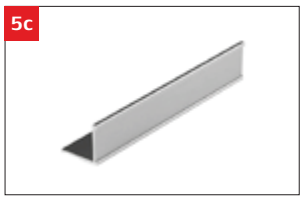

CODE	COLOUR	LENGTH (mm)	COLLECTIVE PACKAGING	PRICED PER	NET PRICE
00078	SILVER	1700	60	item	
00079	SILVER	2350	60	item	
00080	SILVER	3000	60	item	

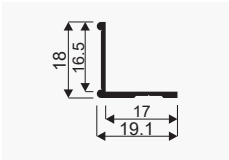

Soft-close for sliding doors
OPTIMA

Each set comprises of 2 pcs Left & Right

CODE	COLLECTIVE PACKAGING	PRICED PER	NET PRICE
20195	9	set	

TEXTILE DOOR STOP

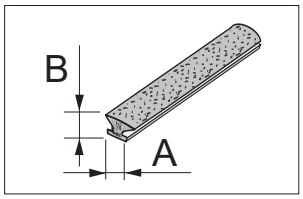

Our full offer can be found in the "Profiles and furniture accessories" section

CODE	NAME	A (mm)	B (mm)	INSTALLATION	ROLL LENGTH	COLLECTIVE PACKAGING	PRICED PER
20020-SV	TEXTILE DOOR STOP	4.8	4	INSERTED	550 r.m.	4 rolls	running M
20225-SV	TEXTILE DOOR STOP	4.8	4	INSERTED	100 r.m.	10 rolls	roll
20094-SV	TEXTILE DOOR STOP	14	4	INSERTED	200 r.m.	4 rolls	running M
20224-SV	TEXTILE DOOR STOP	14	4	INSERTED	50 r.m.	10 rolls	roll

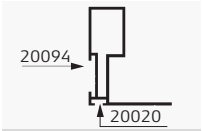

Handle **OPTIMA 16** & **18**

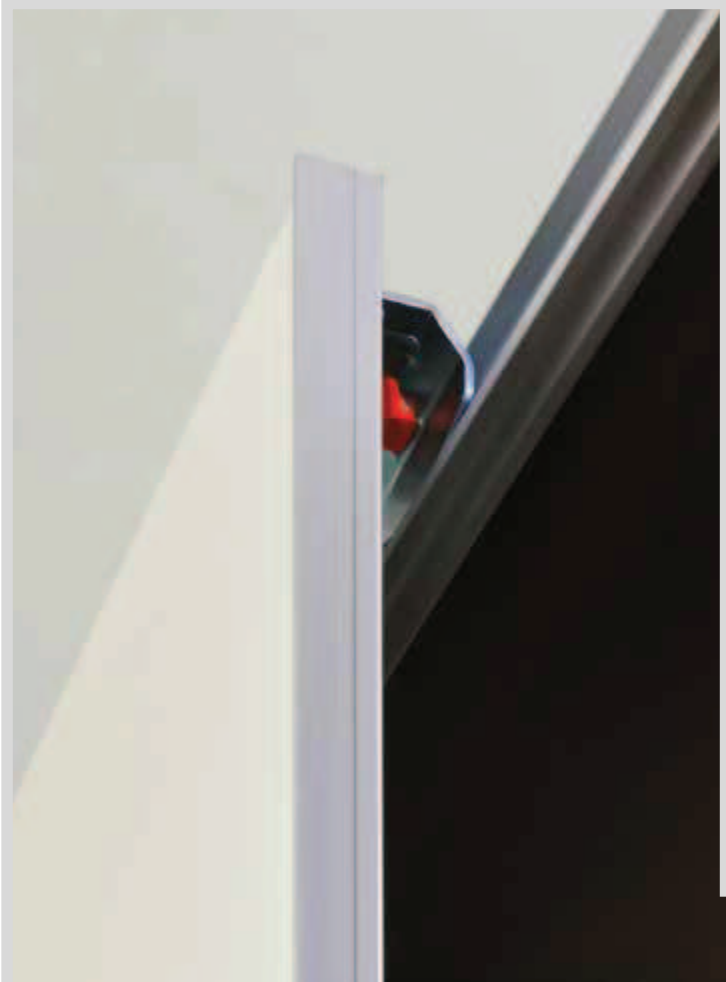

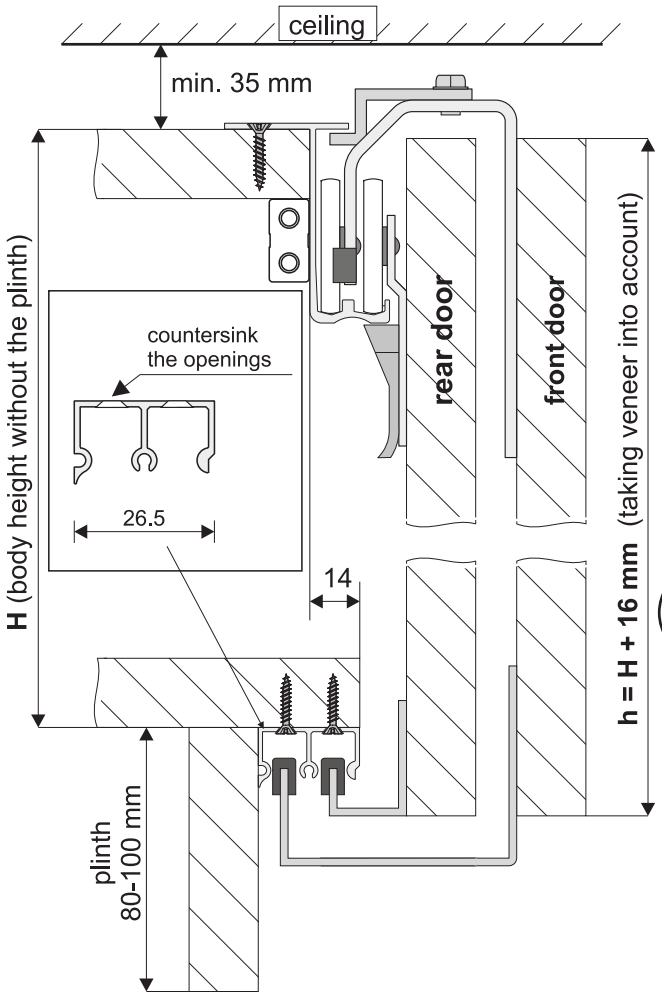

ATTENTION

Door height should be greater than body height (without the plinth) by exactly 16 mm. Top flange should be moved back by 14 mm in relation to the bottom flange and should be fastened firmly. Thickness of board: max. 20 mm.

Rear door assembly

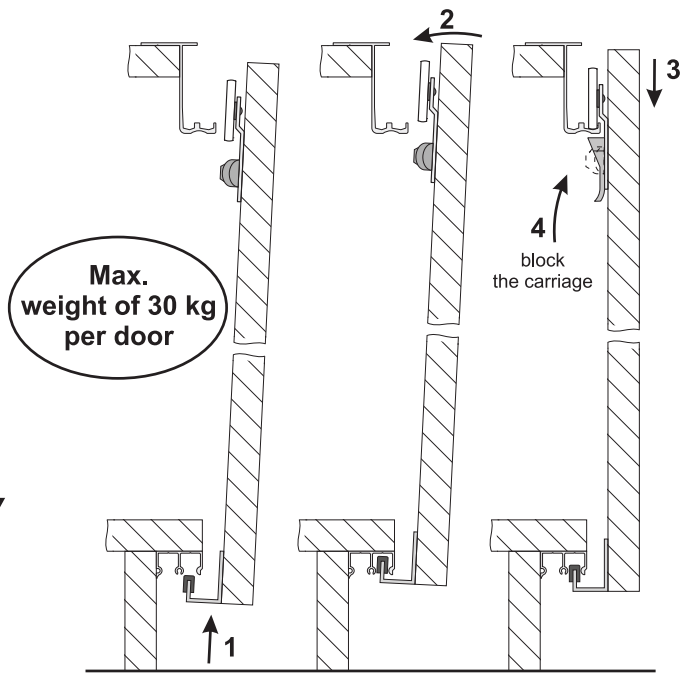

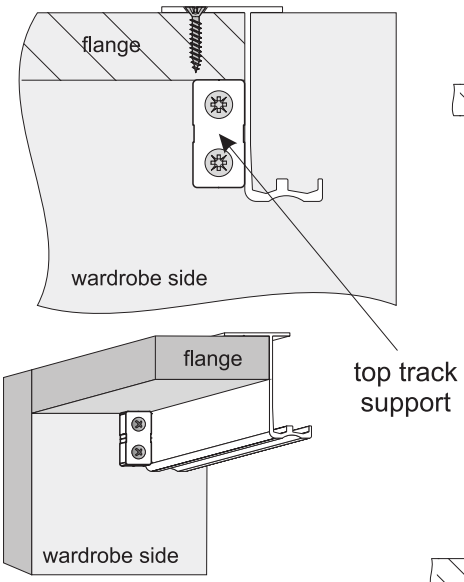

Front door assembly

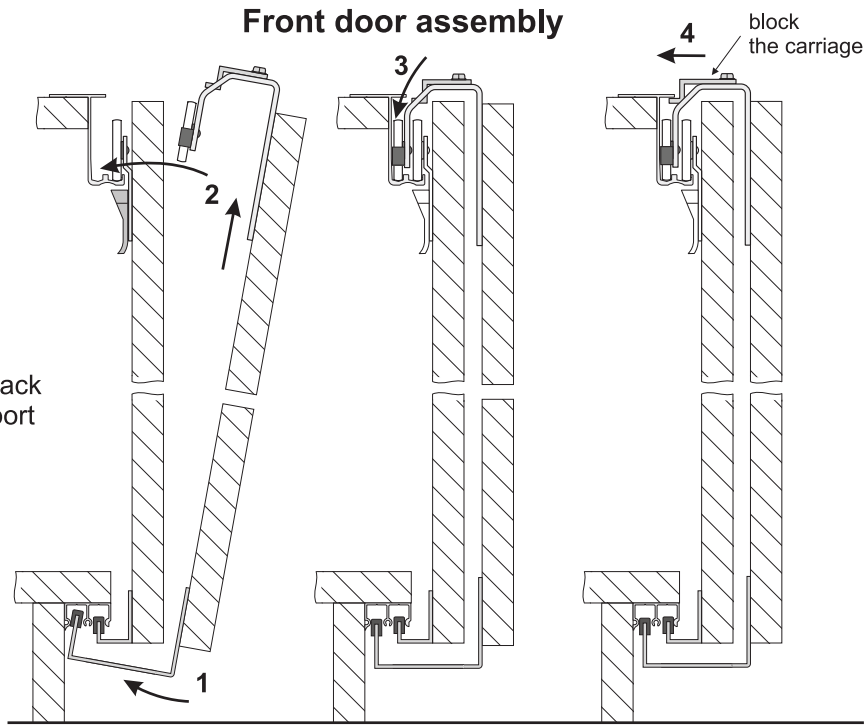

COMPONENTS

Top track Optima

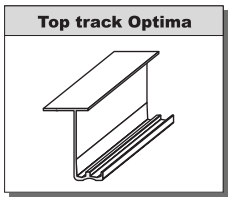

Length 2.00 m, 2.40 m

Bottom track Optima

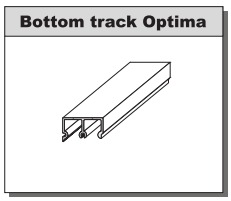

Length 2.0 m, 2.4 m

Set for sliding doors Optima II – 2 door wings

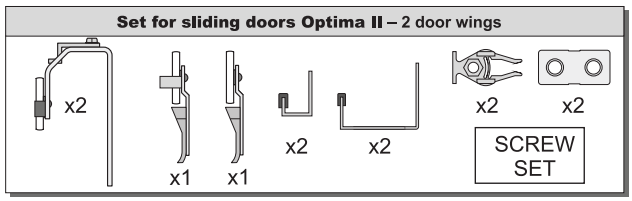

OPTION

Handle Optima

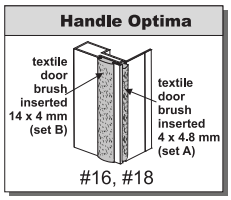

Length 2.4 m

board width calculation

door without vertical profiles
(taking edging into account)

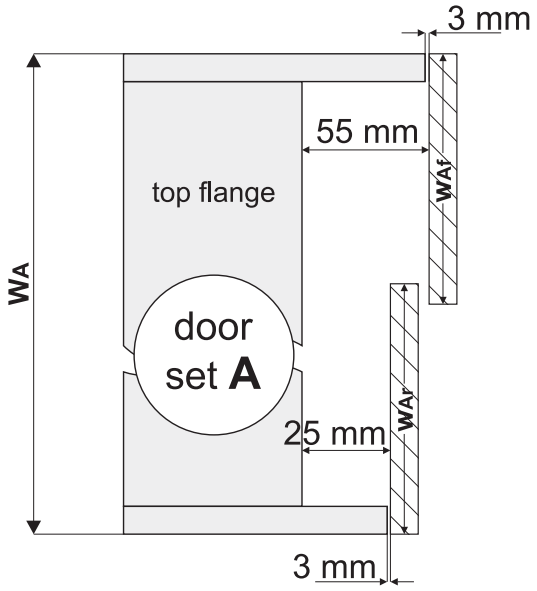

$w_{Af} = w_{Ar} = (W_A + 20\ mm) : 2$

door with vertical profiles (handles)
rear door - 1 handle
front door - 2 handles

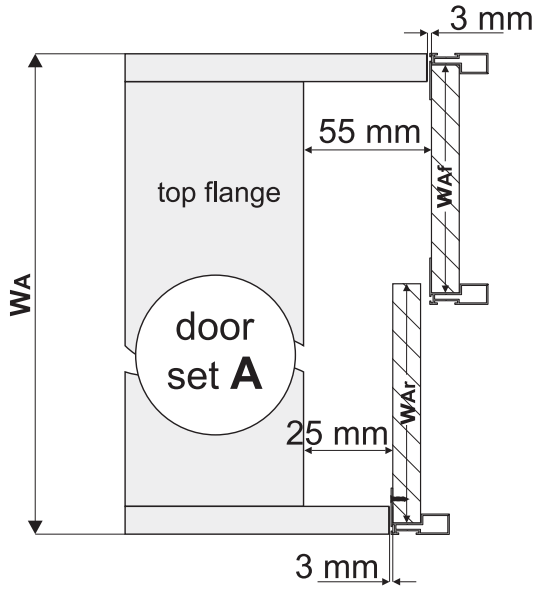

$w_{Af} = [(W_A + 20\ mm) : 2] - 14$

$w_{Ar} = [(W_A + 20\ mm) : 2] - 7$

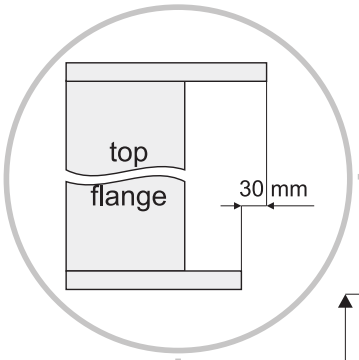

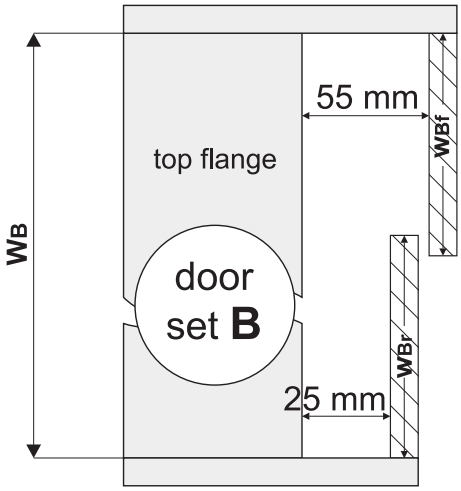

$w_{Bf} = w_{Br} = (W_B + 20\ mm) : 2$

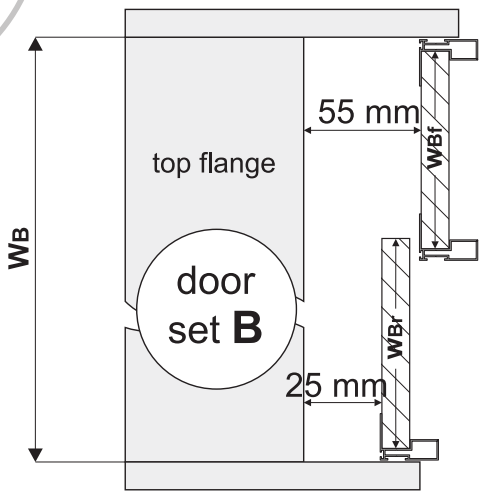

$w_{Bf} = [(W_B + 20\ mm) : 2] - 14$

$w_{Br} = [(W_B + 20\ mm) : 2] - 7$

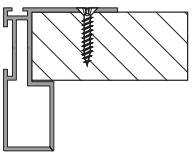

handle to be fastened with a minimum of 4 screws

Fastening of carriages and guides to the rear door

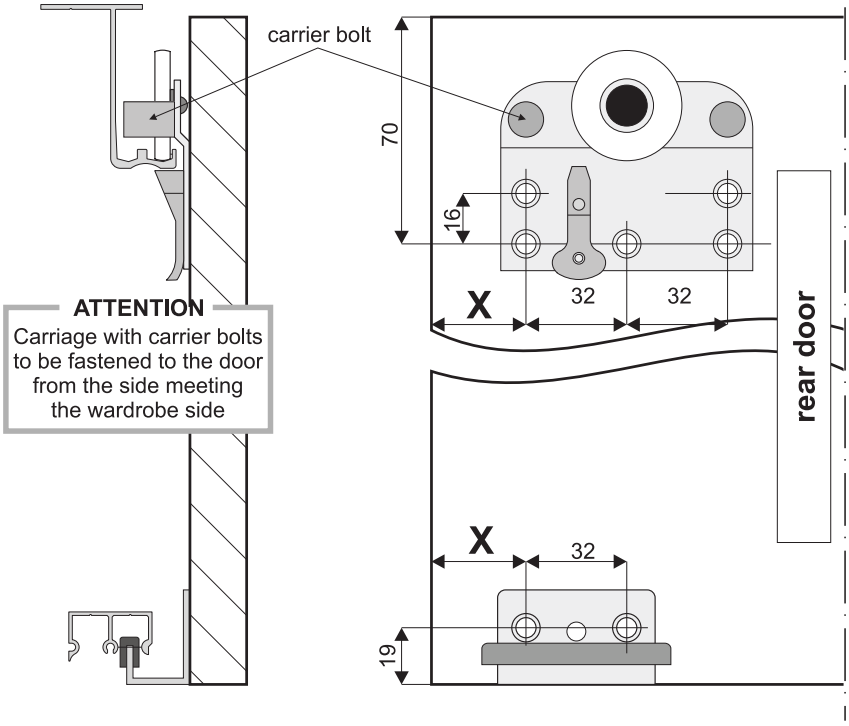

ATTENTION
Carriage with carrier bolts to be fastened to the door from the side meeting the wardrobe side

Fastening of stopper to the top track

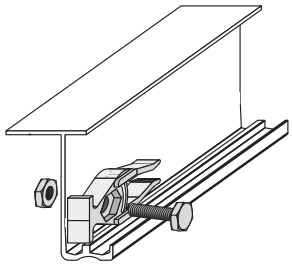

drill an opening in a track ⌀ 6

rear door (set **A** and **B**)
door without and
with vertical profiles (handles)

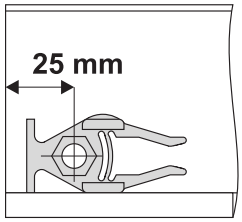

Fastening of carriages and guides to the front door

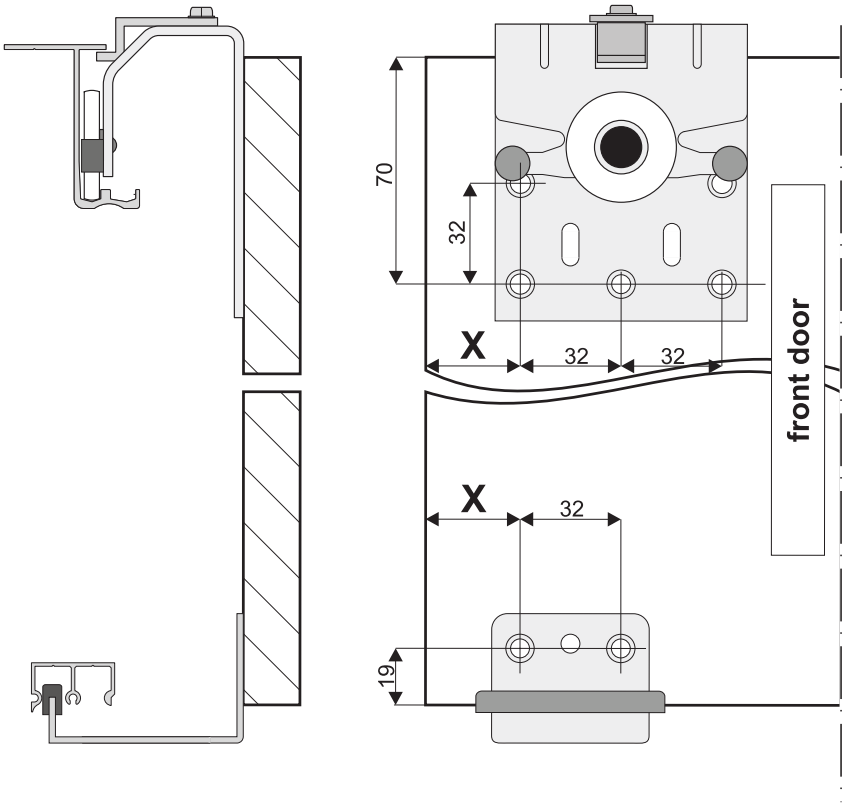

front door (set **A** and **B**)
door without and
with vertical profiles (handles)

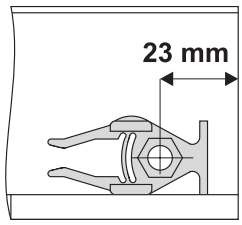

distance	door without vertical profiles		door with vertical profiles (handles)	
	door set A	door set B	door set A	door set B
X	58 mm	40 mm	51 mm	31 mm

Optionally, instead of stoppers, soft-closes **Optima** can be used (purchased separately)

Option with mirror (only available for front door wing) door set A and B

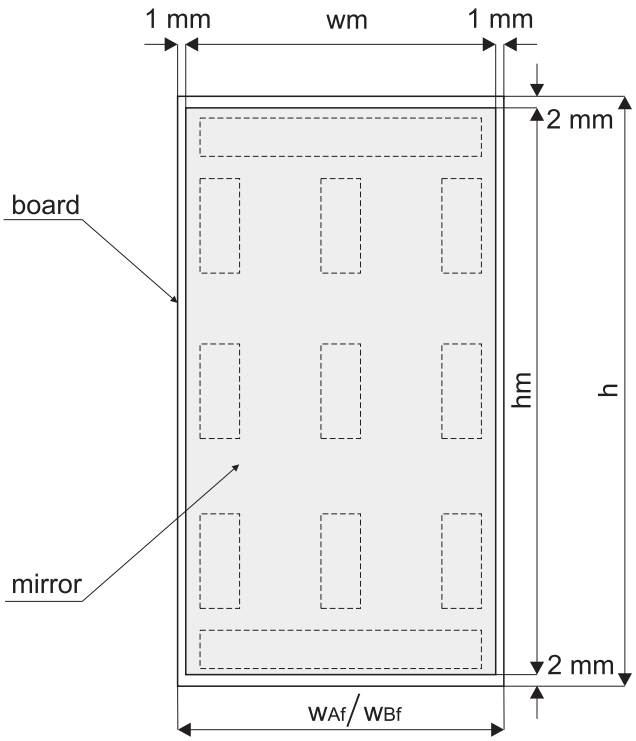

Broken line indicated recommended positioning of double-sided tape

ATTENTION :
Board to mirror contact area should be free from dirt and grease before applying double-sided tape

mirror dimensions

wm = WAf/WBf - 2 mm

hm = h - 4 mm

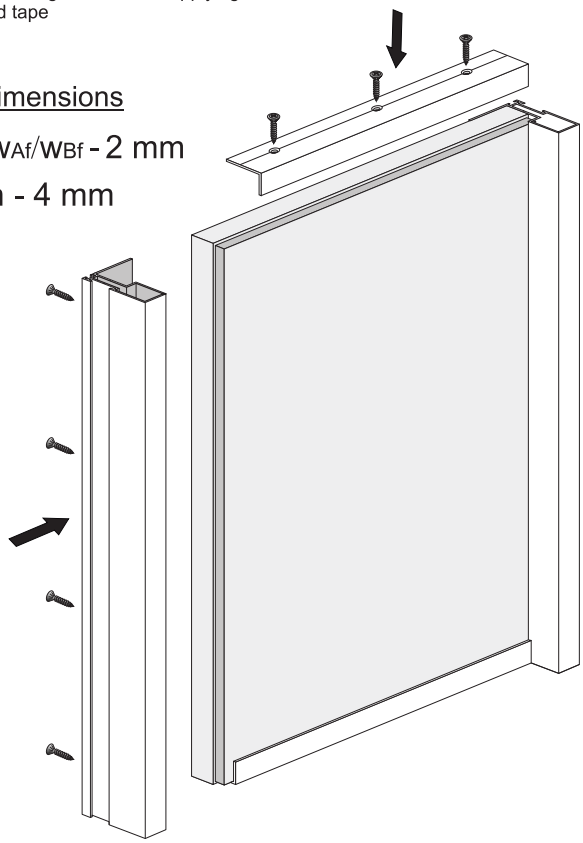

ATTENTION!

The usage of angle section requires the handle to be 3 mm longer than board size
(protruding by: 1.5 mm - top, 1.5 mm - bottom)

Use angle section Mini

Fitting of handle OPTIMA # 16

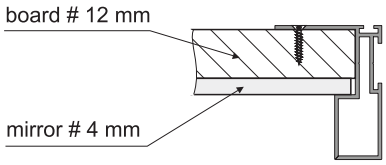

Fitting of angle section MINI

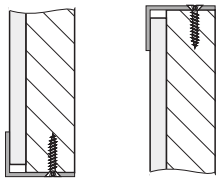

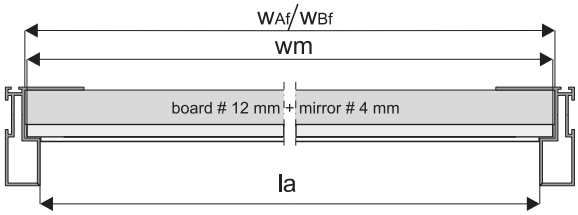

la - angle section Mini length

la= WAf - 12 mm

for aesthetic reasons,
the angle section length should be decided after handle fitting

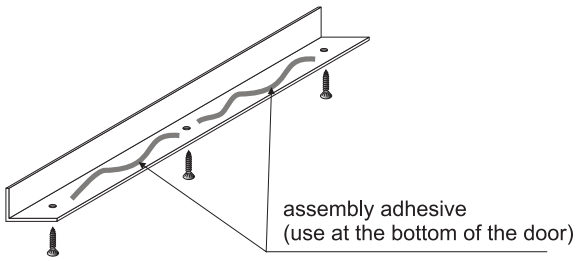

ATTENTION!
Angle section must be fastened to board with a minimum of 3 screws ∅3x25

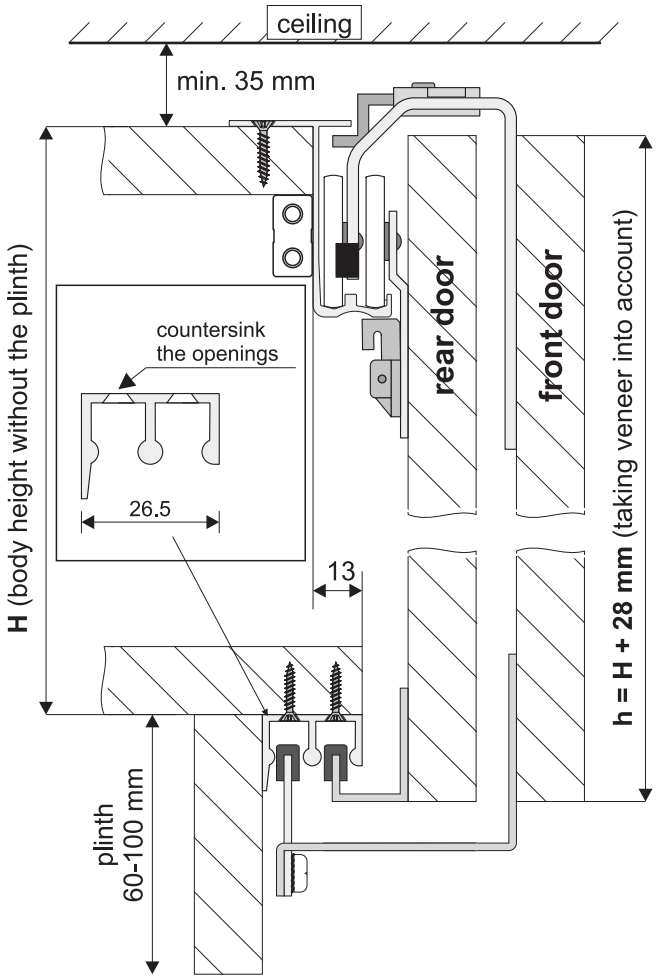

ATTENTION

Door height should be greater than body height (without the plinth) by exactly 28 mm.
Top flange should be moved back by 13 mm in relation to the bottom flange and should be fastened firmly.
Thickness of board: max. 20 mm.

Rear door assembly

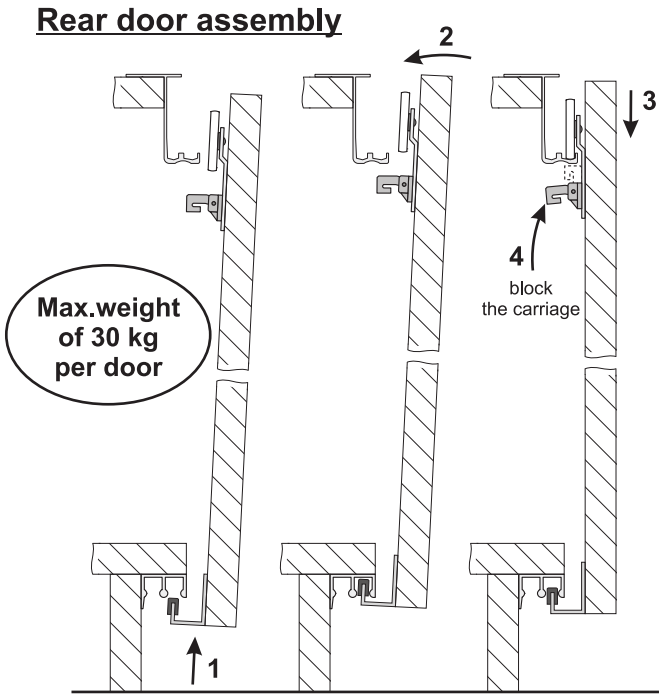

Front door assembly

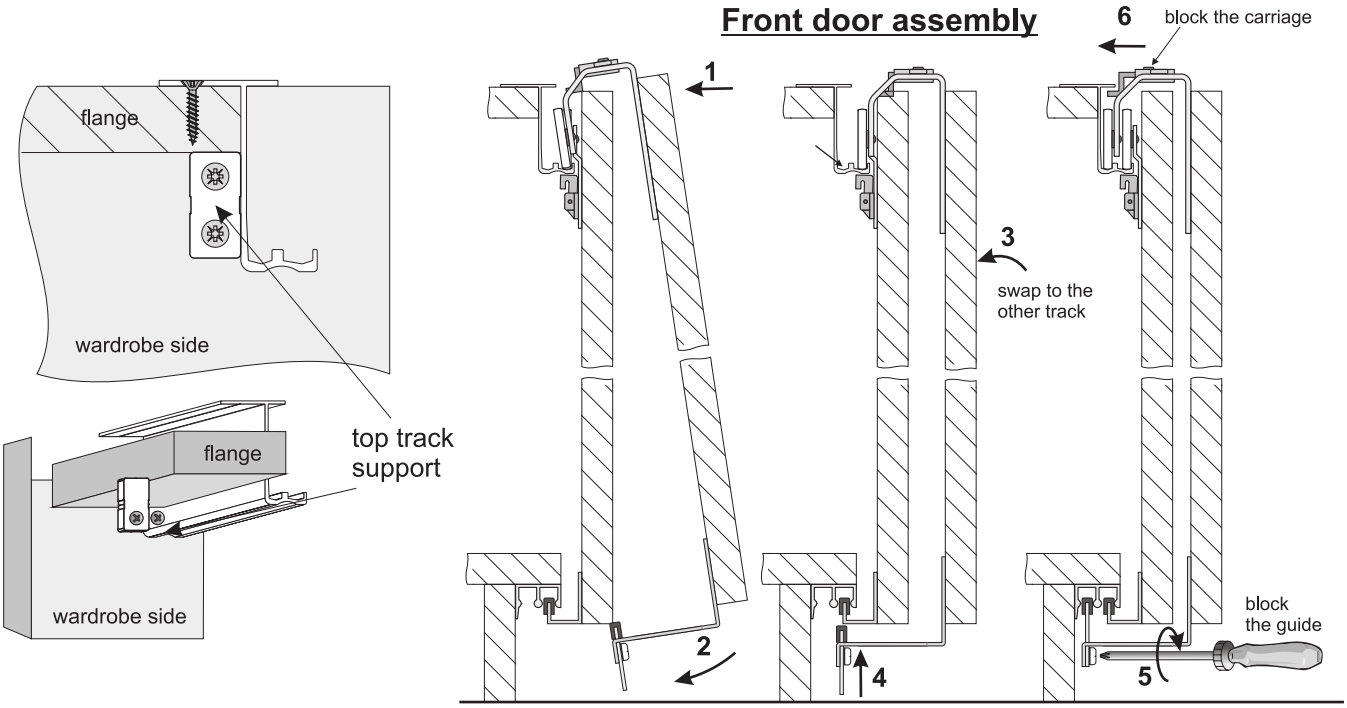

COMPONENTS

Top track Optima

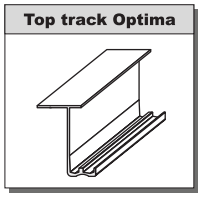

Length 2.00 m, 2.40 m

Bottom track Optima

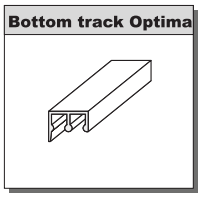

Length 2.0 m, 2.4 m

Set for sliding doors Optima – 3 door wings

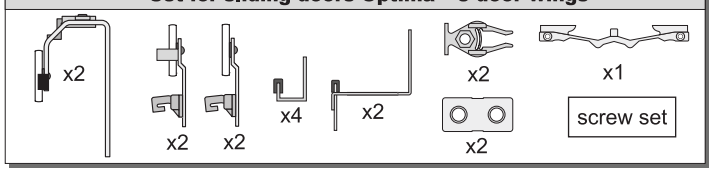

OPTION

Handle Optima

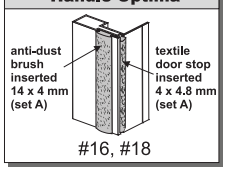

Length 2.4 m

board width calculation

door without vertical proles
(taking edging into account)

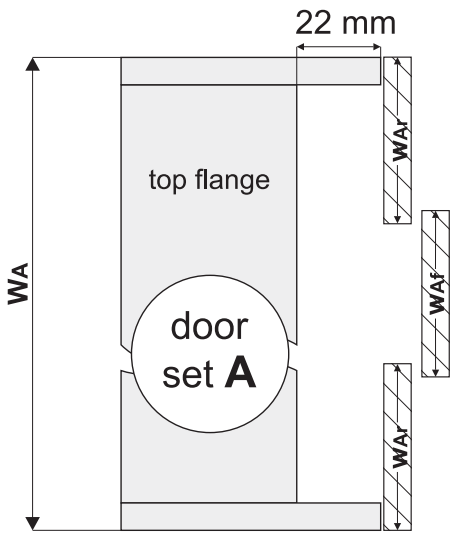

$w_{Af} = w_{Ar} = (W_A + 40\ mm) : 3$

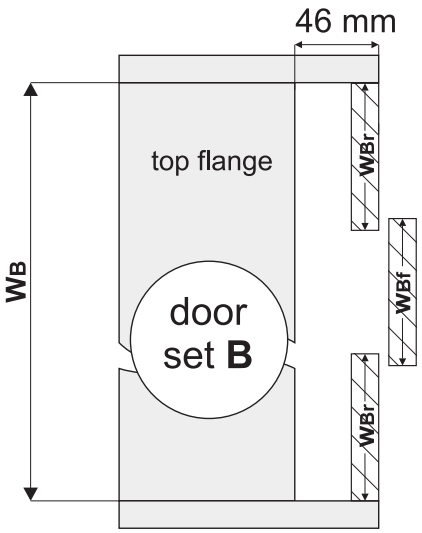

$w_{Bf} = w_{Br} = (W_B + 40\ mm) : 3$

door with vertical proles (handles)

rear door - 1 handle
front door - 2 handles

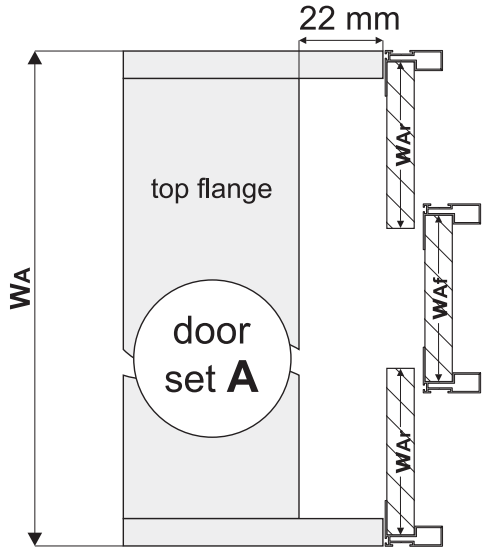

$w_{Af} = [(W_A + 40\ mm) : 3] - 14$

$w_{Ar} = [(W_A + 40\ mm) : 3] - 7$

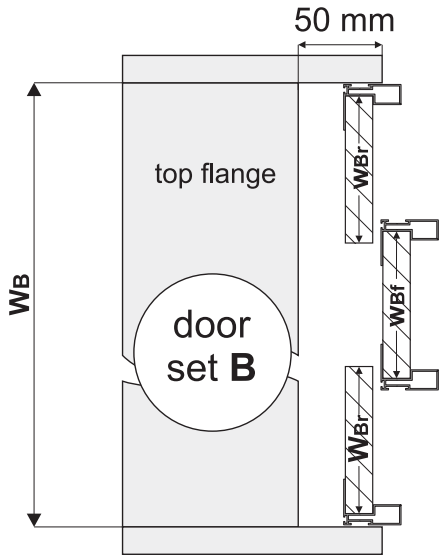

$w_{Bf} = [(W_B + 40\ mm) : 3] - 14$

$w_{Br} = [(W_B + 40\ mm) : 3] - 7$

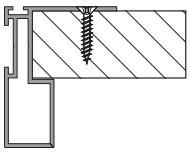

handle to be fastened with a minimum of 4 screws

Fastening of carriages and guides to the rear door

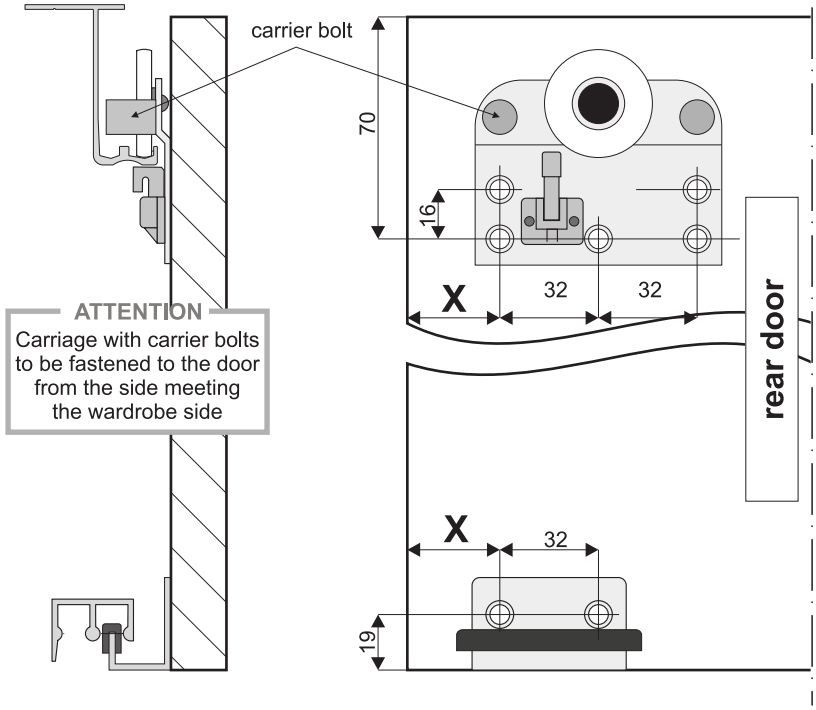

Fastening of stopper to the top track

rear door (set **A** and **B**)
door without and
with vertical proles (handles)

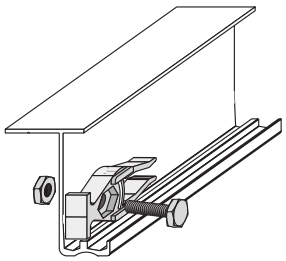

drill opening in track ∅6

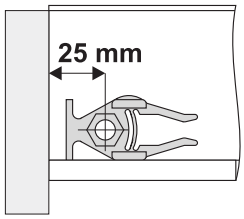

Fastening of carriages and guides to the front door

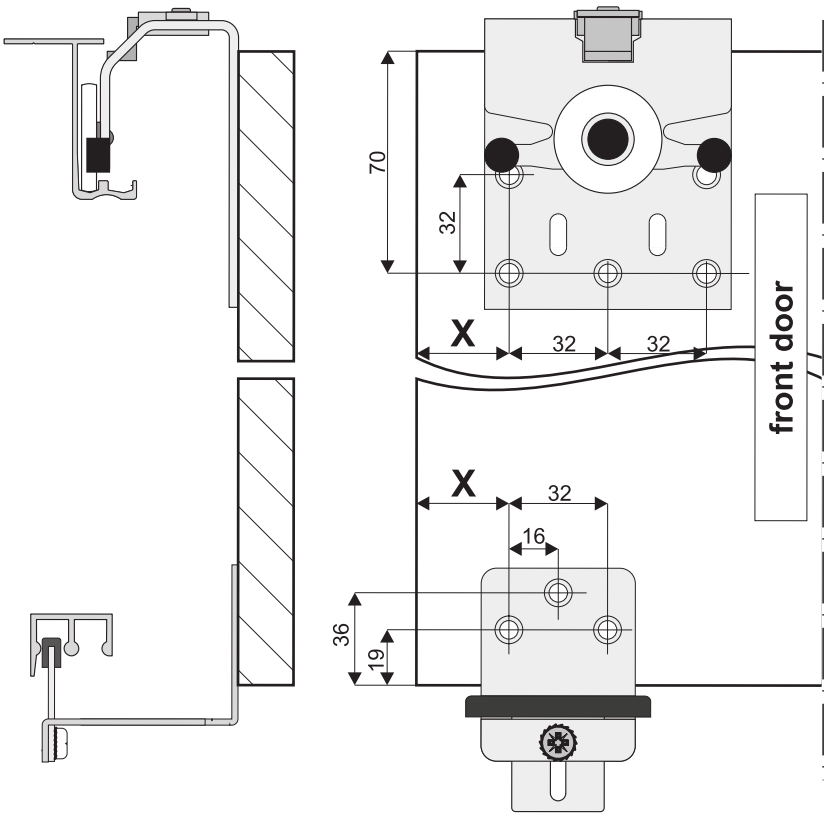

front door
(fasten after door assembly)

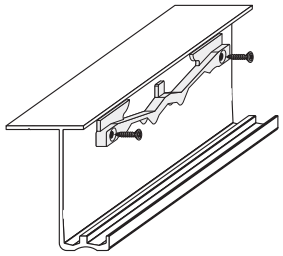

use self-tapping screw ∅3.5
or drill opening in track ∅2.5
and use Unix screw ∅3.5

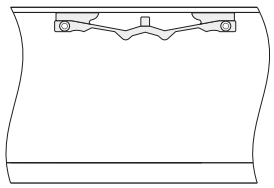

distance	door without vertical profiles		door with vertical profiles (handles)	
	door set A	door set B	door set A	door set B
X	58 mm	40 mm	51 mm	31 mm

Optionally, instead of stoppers, soft-closes **Optima** can be used purchased separately (only for rear door)

Option with mirror (only available for front door wing) door set A and B

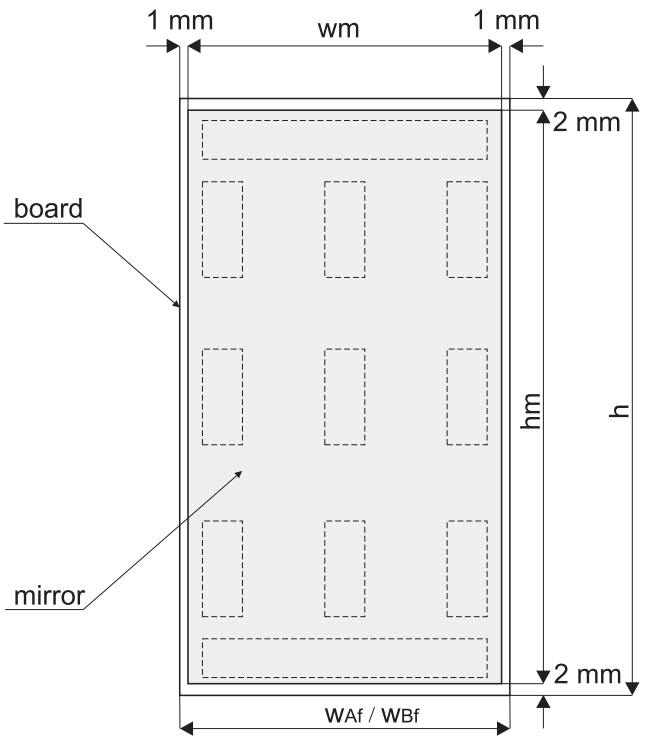

Broken line indicates recommended positioning of double-sided tape

ATTENTION:
Board to mirror contact area should be free from dirt and grease before applying double-sided tape

mirror dimensions

wm = WAf / WBf - 2 mm

hm = h - 4 mm

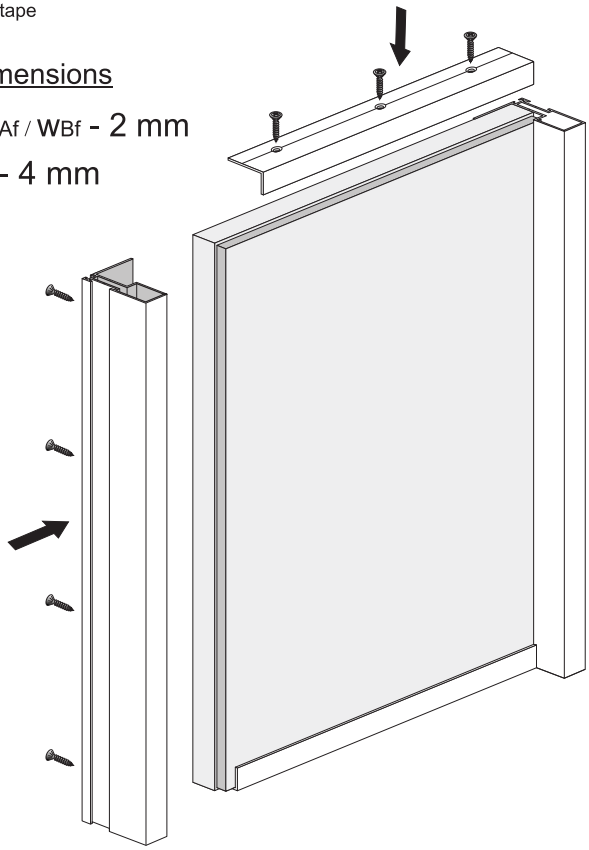

ATTENTION!

The usage of angle section requires the handle to be 3 mm longer than board size
(protruding by: 1.5 mm - top, 1.5 mm - bottom)

Use angle section Mini

Fitting of handle OPTIMA # 16

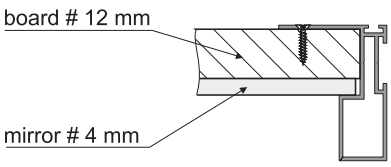

Angle section MINI assembly

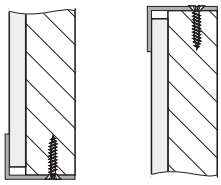

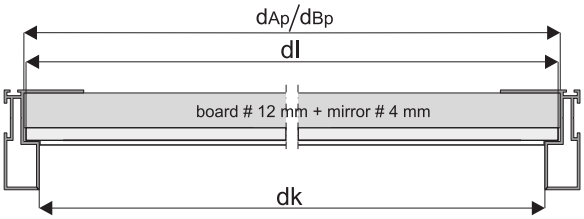

la - angle section Mini length

la= WAf - 12 mm

! for aesthetic reasons, the angle section length should be decided after handle fitting

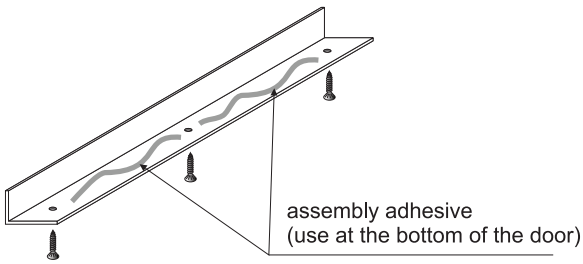

ATTENTION!

Angle section must be fastened to board with a minimum of 3 screws ∅ 3 x 25.